VICTRON ENERGY + LITHONICS BATTERY + NATIONS + WAKESPEED - *SECONDARY ALTERNATOR* EXAMPLE WIRING DIAGRAM

VERSION 11 - OCTOBER 2022

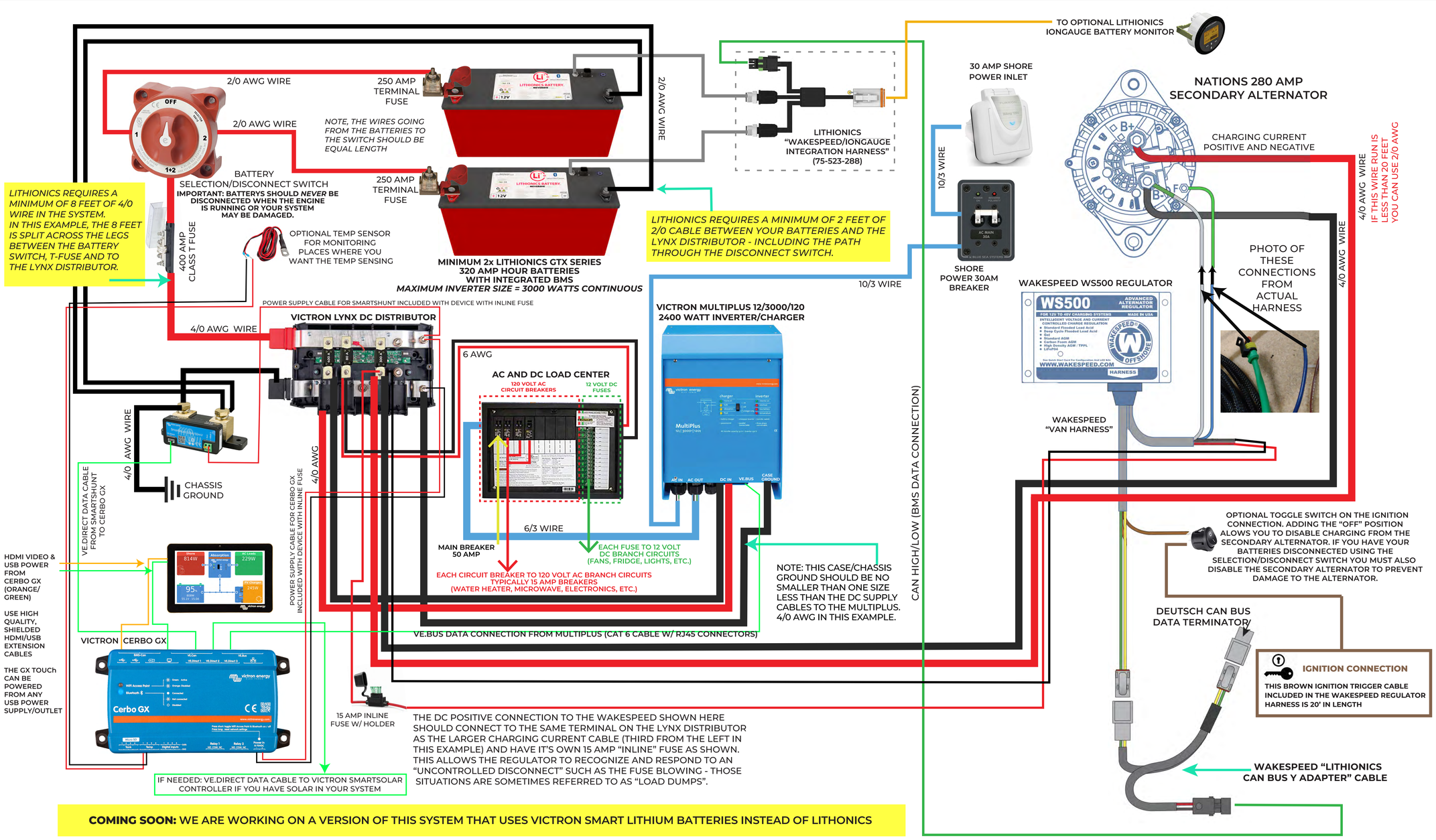

COMING SOON: WE ARE WORKING ON A VERSION OF THIS SYSTEM THAT USES VICTRON SMART LITHIUM BATTERIES INSTEAD OF LITHONICS

VANLIFE OUTFITTERS

SPECIAL BUNDLE PRICE

$700 TO $1,100 SAVINGS WHEN PURCHASED IN OUR BUNDLE

SUPER FAST CHARGING FROM A DEDICATED SECONDARY ALTERNATOR

NO SALES TAX TO MOST STATES

WORLD-CLASS SERVICE & SUPPORT

SCAN FOR DETAILS

THIS IS NOT ELECTRICAL ADVICE. THIS IS AN ILLUSTRATION OF ELECTRICAL SYSTEMS THAT WE HAVE USED IN OUR VANS. ALWAYS DO YOUR OWN RESEARCH AND USE THIS INFORMATION AT YOUR OWN RISK.

Pricing and offers subject to change.