VICTRON ENERGY - DISCOUNTED PRODUCT BUNDLE - *EXTERNAL VE.BUS BMS* - EXAMPLE WIRING DIAGRAM

VERSION 4 - JUNE 2024

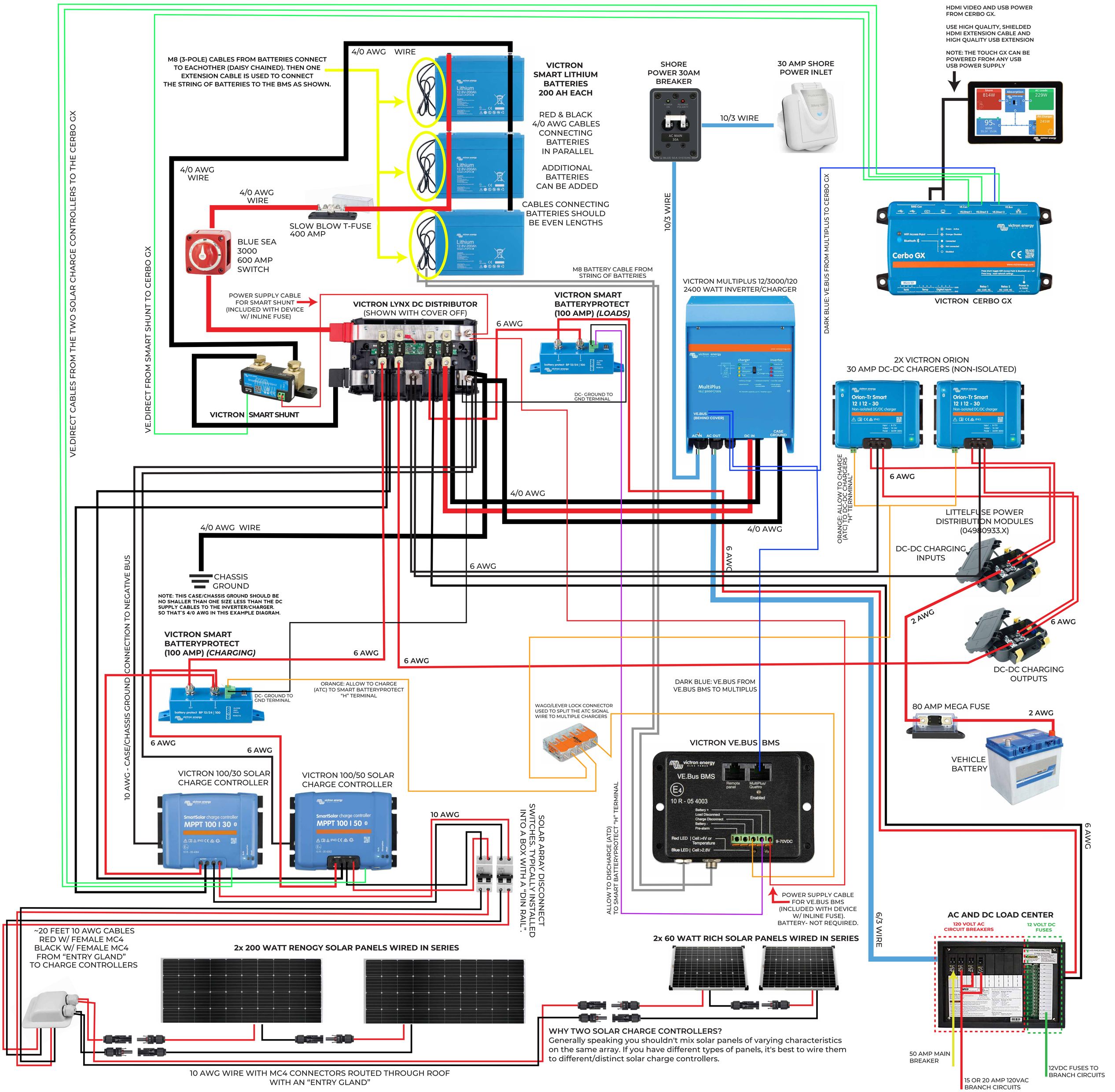

VANLIFE OUTFITTERS

THIS IS NOT ELECTRICAL ADVICE.
THIS IS AN ILLUSTRATION OF ELECTRICAL SYSTEMS THAT WE HAVE USED IN OUR VANS.
ALWAYS DO YOUR OWN RESEARCH AND USE THIS INFORMATION AT YOUR OWN RISK.

Pricing and offers subject to change.

SUPER AWESOME BUNDLE PRICE

WORLD-CLASS SERVICE & SUPPORT

FAST & FREE GROUND SHIPPING

NO SALES TAX TO MOST STATES

SCAN FOR DETAILS